ARRIVAA
Robustly Engineered



ARRIVAA POWER SYSTEM PRIVATE LIMITED

Manufacturers of:

- KPTCL Approved 11kV MCVCB panels
- All ESCOMS approved LV & MV Metering Cubicles, Feeder pillars, Compact Sub-Stations, VCB panels & LBS panels
- Low Voltage panel Boards as per IEC – 61439
- Special panels for Solar, Turbine & DG segments

Industries - Infrastructure - OEM – Exports

www.arrivaa.in

COMPANY PROFILE:

Arrivaa Power System Pvt Ltd is an ISO 9001 : 2015 certified manufacturer of complete range of Low and Medium voltage panels with BESCOM & KPTCL approvals. The company has two manufacturing units in Bengaluru – Karnataka. The units are fully equipped with necessary infrastructure, Equipment and testing facilities
We have teams of well experienced Engineers & Technicians offering best quality products to the customer at most competitive prices with quickest deliveries.

OUR VISION:

- To become a globally competitive and a customer focused company in the switchgear industry.
- Design and timely deliver maintenance free quality products to customers, fulfill and satisfy all customer specific requirements.
- To become a popular brand and high technology switchgear and panel manufacturing company in the country by 2030.

MISSION:

- To generate internal resources for profitable growth.
- To raise products and marketing abilities to global standards.
- To create a facilitating environment for employees to realize their full potential through learning & team work.

QUALITY POLICY:

We at Arrivaa Power System are committed to provide globally superior quality and user friendly Low Voltage, Medium Voltage switchgear products.
We have designed and type tested the switchgear products as per national and international standards to meet all our customer requirements.
By providing an outstanding service and product quality we will achieve our aim of long term success and sustained development.
All personnel within the company are responsible for the quality of their work.
The company provides training to all personnel to achieve the standards required.
We are committed to investigate customer complaints and will do our best to put right all justified complaints.
To be a customer focused supplier of Low and Medium voltage switchgear products and give value for money to customers.

ARRIVAA Power System Private Limited

The next Gen

"SMART" Compact Secondary Substations

from 63 kVA to 2500 kVA, 11kV / 22kV / 33 kV



Arrivaa Compact Secondary Substation (CSS) are specially designed for locations where space and safety is of prime concern.

Compact Secondary Substations are of plug & play design, very much useful where cost of space is very high & aesthetic aspects are of most concern; needless to say CSS are the safest gadgets replacing conventional fenced sub stations.

CSS will generally have 3 compartments:

Typical configuration

M.V. Compartment	Transformer Compartment	L.V. Compartment
11 / 22 / 33 kV RMU / VCB / LBS	63 kVA to 2500kVA Oil filled or Dry type Cast Resin Transformer	3 / 4 Pole LT ACB / MCCB / SFU Incomer
H.T. Metering / Load manager	Off Circuit or On load tap Changer with RTCC panel	ACB / MCCB / SFU for distribution
Door interlock for safety	Door interlock for safety	MDM / VAF meters with communication
Earth fault, over current relay	OTI & WTI with Alarm & Trip contacts	APFC Panel with Capacitor Bank
SCADA or PLC Compatible	Magnetic Oil Gauge & Bucholz Relay	Digital temparature indicator

General Details of Arrivaa CSS

Arrivaa Compact Secondary Substations are approved with **BESCOM** and all other **ESCOMS**.

The oil type transformer is star rated as per **BESCOM** / **ESCOM** specifications & will be compact in design with corrugated tank.

Cast resin dry type transformer will come with necessary protections & forced cooling.

Special Features:

- Alarm in the event of overloads & Faults.
- All parameters are displayed on an external display / remote terminal.
- Enough space for ease of servicing.
- LT & HT switchgear with add on gadgets for ***"SMART"*** communication.
- All transformer parameters are displayed & clearly visible.
- Design complying with Indian & International standards **IEC62271-202**
- The enclosure is fabricated with CRCA or GI sheets as per customer specifications.
- Degree of protection IP 23 for transformer and IP 54 for MV & LV compartments or as per customer requirements.









ARRIVAA

Manufacturer of KPTCL Approved

Complete Range of 11kV MCVCB Panels



ARRIVAA
Robustly Engineered

MODELS:

APS MV 20 : 800A 20KA for 3 Secs
APS MV 25 : 1250A 25kA for 3 Secs
APS MV 30 : 1600A 31.5kA for 3 Secs
APS MV 35 : 2000A 31.5kA for 3 Secs

KPTCL APPROVED COMPLETE RANGE OF 11kV MCVCB PANEL BOARDS

SALIENT FEATURES

- Available in 12kV, 2000A, 31.5kA range
- Designed to adapt directly with existing line up of panels
- Stand-alone Switchboard (ICOG)
- Cable in-cable-out Switchboard (CICO)
- Line-up Switchboard Compact & Sturdy
- Draw-out Design
- Fully Compartmentalized
- Spring Charged Mechanism
- Adequate Termination Space
- Cable in and out from bottom
- Flexible LV Control & Protection
- Flexible Metering Options
- Degree of Protection: IP 55
- SCADA / DMS / EMS I BMS / SAS compatible Various Optional Accessories
- Type Tested as per IS / IEC Standards



Guaranteed Technical Particulars:

PARAMETERS	APS MV 20	APS MV 25	APS MV 30
Rated Voltage (kV)	12	12	12
Rated Frequency (Hz.)	50/60	50/60	50/60
Rated Insulation Level (kV)R	12/28/75	12/50/125	12/70/150
Rated Current - Bus Bar (A)	1250	2000	3000
Rated Current-Breaker (A)	1250 /800	1600 /1250	2000 /1600 /1250
Rated Short Circuit Breaking Capacity (kA)	20	25	31.5
Rated Short Circuit Making Capacity (kA)	50	62.5	78.75
Rated Short Time Withstand Current (kA)	20	25	31.5
Rated Short Time Withstand Duration (Sec.)	3		
Panel Communication Compatibility	DAS / SAS		
Remote Monitoring Compatibility	SCADA / DM5 ISAS		
Digital Input/Digital Output (DI/DO)	24 +24		
Aux Voltage	110V / 220V DC		
Aux. Contact	8 N.0 + 8 N.0		
Degree of Protection (Enclosure)	IP 54		
Maximum Ambient Temperature	50 Deg celsius		
Standard	IS /IEC 6227-100 /62271 -200		

ARRIVAA Robustly Engineered

ESCOM APPROVED RANGE OF PRODUCTS

• BESCOM • MESCOM • GESCOM • CHESCOM • HESCOM
APPROVED PANEL BOARDS

11 kV HT Metering Cubicles



MODELS:
APS MC1: With Single Meter
APS MC2: With Dual Meter
APS MCL: Metering Cubicle with LBS

SPECIFICATIONS:
3 Phase 4 Wire Metering cubicle with 3 CT, 3 PT, DLMS Uni directional & Bi-directional meters with Aluminium/ Copper Bus bars, housed in fully welded sheet steel enclosure as per ESCOM specifications.

415 Volt LT Metering Cubicles



MODELS:
APS LTM1: 3Ø up to 100kW

SPECIFICATIONS:
3 Phase 4 wires LT meteringcubicle with 3CT, 3 PT & Aluminium/ Copper Bus bars and housed in fully welded sheet steel enclosure as per ESCOM specifications.

LT Feeder Pillars



MODELS:
APS LF1: 6-Way Feeder Pillar
APS LF2: 8-Way Feeder Pillar
APS LF3: 12-Way Feeder Pillar

SPECIFICATIONS:
3 Phase 415 Volts LT feeders pillars with SFU as incomer & MCB/Fuse links as outgoing feeders linked with Aluminium/Copper Bus bars & housed in fully welded sheet steel enclosure as per ESCOM specifications.

ARRIVAA
Robustly Engineered

11kV HT VCB Panel



MODELS:

APS VB1: up to 630A ICOG panel with STC of 25kA

APS VB1: up to 630A VCB Panel with STC of 25kA

SPECIFICATIONS:

VCB Panel with ARRIVAA VCB, tested up to 2000A & STC of 31.5kA with Al/Copper Bus bars, housed in fully welded sheet steel enclosure as per ESCOM specs.

Compact Substations up to 1000 kVA



MODELS:

APS CS1 – 250 kVA

APS CS2 – 500 kVA

APS CS3 – 1000 kVA

SPECIFICATIONS:

Pre-fabricated compact sub stations with:

- HT Compartment: RMU/LBS
- Transformer compartment: Star rated ESCOM approved Transformer
- LT Compartment: ACB/MCCB Feeders as per customer requirement.

11kV Load Break Switch Panel (LBS Panel)



MODELS:

APS LB1: 630A stand alone LBS Panel

APS LB2: 630A line-up LBS Panels

SPECIFICATIONS:

11kC HT LBS Panels with 630 A Load Break Switch linked with Aluminium/Copper Bus bars & Housed in fully welded sheet steel enclosure as per ESCOM specifications.

ARRIVAA Robustly Engineered

ARRIVAA Low & Medium Voltage Panels:

Low Voltage Panels:

Arrivaa Power System has been manufacturing CPRI tested Low voltage panel boards up to 6300A as per IEC 60439 & IEC 61439 & supplying to reputed Domestic & International customers. We manufacture panels with single front/double front, Fixed & draw-out type design up to Form-4B Construction.

The complete structure shall be rigid; a semi modular design, self-supporting & free from twists and bends. The panels will be totally dust and vermin proof. The enclosure will undergo pre-treatment covering de-greasing, water rinsing & de-rusting/phos-phating. It will be synthetic enamel painted or powder coated as per requirements. Bus Bars & Internal Wiring will be of uniform cross section Aluminium/Copper bars (current density as per the relevant IS/IEC) supported by SMC/DMC/FRP bases will be employed throughout the length of the panel. Internal wiring will be carried out with 1100/690 volt grade PVC insulated stranded FRLS wires. All joints will be solidly crimped using copper terminals, copper Earth Bus Bars will be running all along the board.

Power Control Centres (PCC):



- Rating: up to 6300 Amps
- STC: up to 65kA
- Ingress Protection: up to IP 55
- Top/Bottom/Back Bus Bar System
- Modular & Semi Welded Design

Motor Control Centres (MCC):



Single front & Double front design
Fixed & Draw-out Feeders
Ingress up to IP 54 & Form-4B Construction
Intelligent Motor Control Centres with communication

Power Distribution Boards (PDB):



We manufacture Distribution boards for Industrial & Infrastructure segaments with MS, Aluminium, Polycarbonate & Stainless Steel enclosures as per customer requirements.

APFC Panels & Harmonic Filters:



- Use of advanced APFC relay
- Auto Capacitor on/off as required
- Use of appropriate capacitors & reactors
- Harmonic Filters to suit the load pattern & Harmonics

DG AMF & Synchronization Panels:

- Synchronizing up to 16 + DGs at a time
- All DGs connected through a SCADA, monitoring & operation from a single point
- Use of High end DG Sync Relays of reputed makes as per customer requirements
- Load Manager with Power reverse protection, Earth fault, field loss, auto manual synchronisation, dual volt meter, dual frequency meter, all in a single unit.



NGR, LAVT & Turbine Control Panels:

- NGR Panel with manual/motorized isolator, also with vacuum contactor.
- Lightening Arrestor & Voltage Transformer (LAVT) Panels
- 6.6kV to 33kV Turbine Synchronization



3.3kV to 36kV Medium Voltage Panels:

Salient Features:

- Kiosk Type construction with double door in the front
- Rear door has both hinged and bolted options for safety
- Adequate slope given on top roof to drain water, dust and particles
- Robust weather & dust proof-IP5X degree of protection externally and IP2X between compartments
- Fully welded construction, duly Powder painted after seven tank process pre-treatment
- Type tested for BIL and Short circuit as per IC 62271/200/2003
- Kiosk available in both Cable In/Out design and side extendable kiosks
- Rodent proof, Lockable front main door, Maintenance friendly

Descrition	Unit	11kV Vacuum	33kV Vacuum
Rated Voltage	KV	3.3 to 12	36
Rated Frequency	Hz	50	50
Rated Busbar Current	A	Upto 2000A	Upto 1250A
Short time	KA	26.2/40	31.5
Withstand Current	KAb	66/100	66
Insulation Levels	KVrms/KVp	28/75	70/140
Dimension LxDxH	mm	700x1450x2350	1200x2300x2300
Degree of Protection * Enclosure *Between Compartments		 IP54 IP2x	 IP54 IP2x
Weight with Breaker (App)	KG	900	900

ARRIVAA Robustly Engineered

SAS SOFTWARE SOLUTION

From Field Connectivity to Intelligent Data Management

Arrivaa Power System SAS solution provides an integrated platform for substation monitoring, control, communication and data management. The architecture connects field-level equipment with centralized supervision, real-time data acquisition, historical analysis and controlled user access

1. Field Connectivity & Multi-OEM Integration

The system interfaces with protection relays, IEDs, energy meters and other substation equipment to acquire electrical measurements, equipment status, protection indications and operational information. Its OEM-independent architecture enables integration of devices from different manufacturers, supporting both new substations and modernization of existing installations.



2. IEC 61850 & Seamless Communication

The platform supports IEC 61850-based substation communication, enabling structured exchange of information between intelligent electronic devices and the supervisory system. **The software has been tested by DNV Netherland (KEMA) for IEC61850 compliance.** The software is feasible for KPTCL or any other substations. Field data is acquired and transferred through a seamless communication architecture, providing operators with a unified view of the complete substation.

3. Real-Time Data Acquisition

The SAS system continuously acquires and processes critical operational information, including:

- Voltage and current measurements
- Power and energy parameters
- Controlling & remote stratus of all Equipments
- Protection and trip indications
- Historian & Graphical HMI
- Alarm and equipment status

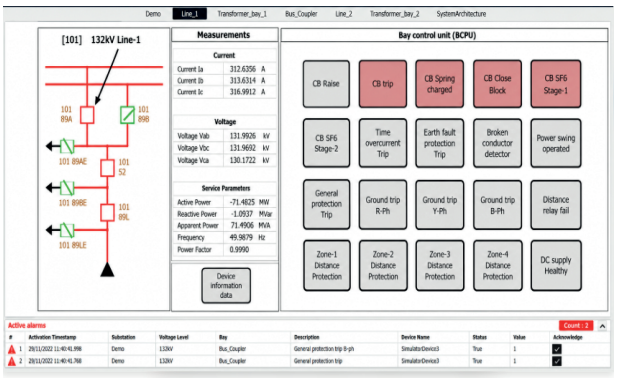

4. Centralized Tag Management & HMI

All field parameters are represented as configured SCADA tags, enabling systematic mapping from the field device to the graphical HMI:

Field Device ⟶ Parameter ⟶ SCADA Tag ⟶ HMI Object

This approach simplifies engineering, commissioning, modification and maintenance.

5. Alarm, Event & SOE Management

The platform provides centralized alarm and event management, helping operators identify abnormal conditions and monitor equipment status changes. Sequence of Events (SOE) functionality maintains time-associated event information, supporting operational review, fault investigation and troubleshooting.

6. Historical Data, Trending & Analysis

Operational data collected from the substation can be stored for historical reference and analysis. Historical information supports trend analysis, previous-value review, equipment performance monitoring, fault investigation, troubleshooting and operational assessment. This provides continuity between real-time supervision and long-term operational analysis.

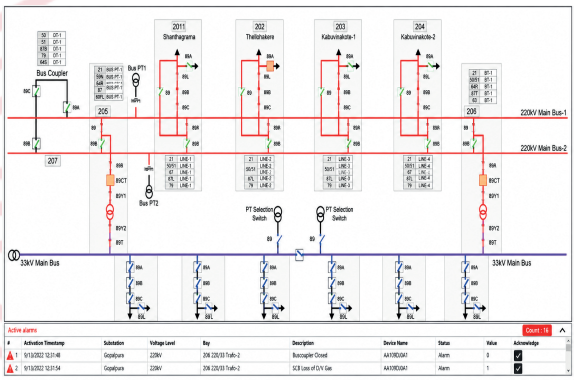

7. User & Role Management

The system provides controlled user and role management, allowing access to monitoring and control functions according to defined user requirements. Different access levels can be assigned to operators, engineers and administrators, supporting secure and controlled system operation.

8. Secure Remote Monitoring & Control

Secure communication and controlled access help protect operational data and system functions while reducing the requirement for individual monitoring of field devices.

Integrated SCADA Architecture

Field Devices ⟶ Communication Network ⟶ Data Acquisition ⟶ Tag Management ⟶ SCADA HMI ⟶ Alarms & SOE ⟶ Historian ⟶ Trends & Analysis ⟶ User/Remote Access

Arrivaa Power System SAS solution therefore provides a unified digital platform from field-level connectivity to centralized monitoring, control, historical data management and operational analysis, supporting efficient engineering, reliable operation and informed decision-making across substation automation environments.

OUR MAJOR CLIENTELE



Arrivaa Power System Pvt Ltd

No 28 A, 2nd phase Peenya Industrial Area, Bengaluru - 560058

Phone: +91 95388 53377 +91 95388 43377 +91 95388 13377

Mail: sales@arrivaa.in



Robustly Engineered

Arrivaa Power System Pvt. Ltd.

No 28 A, 2nd phase Peenya Industrial Area, Bengaluru - 560058
www.arrivaa.in

Contact Us

+91 95388 53377
+91 95388 43377
+91 95388 13377

sales@arrivaa.in